ID+ 2.5" Round Trimless Housing

FLC2D | FLC2W

FOCAL POINT®

BEFORE YOU BEGIN

- Luminaires must be installed by a qualified electrician (check with local and national codes for proper installation).
- To prevent electrical shock, disconnect electrical supply before installation or servicing.
- Contractor is responsible for adequately reinforcing walls and/or ceilings to support fixture weight.
- Focal Point, LLC accepts no responsibility for inadequately reinforced walls and/or ceilings.
- The information contained in this drawing is the sole property of Focal Point, LLC. Any reproduction in part or whole without the written permission of Focal Point, LLC is prohibited.

INSTRUCTION KEY

ATTENTION

SEE ADDITIONAL INSTRUCTIONS

POWER OFF

POWER ON

LUMINAIRE MUST BE INSTALLED PRIOR TO DRYWALL CEILING.
ALL GRID LUMINAIRES MUST BE SECURED TO STRUCTURE ABOVE.

COMPONENT KEY

NON-EMERGENCY
THERMALLY PROTECTED, NON-IC

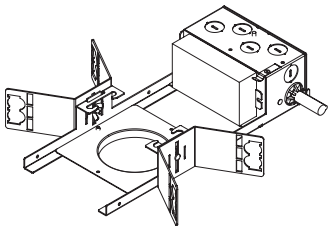

OPTIONAL
BAR HANGERS SOLD SEPARATELY

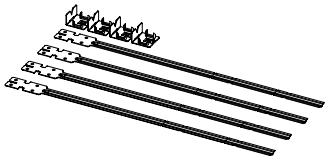

IC/CP

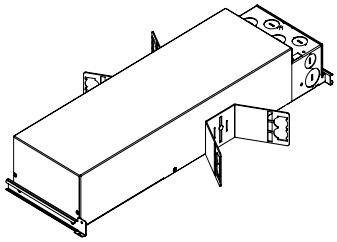

WALL WASH ORIENTATION

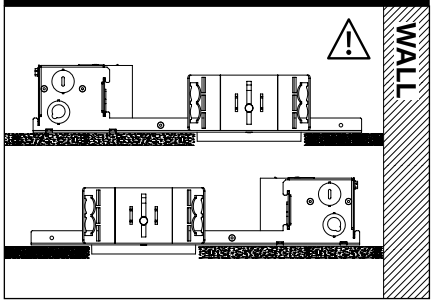

KEEP SHADED AREA FREE FROM OBSTRUCTION ABOVE CEILING

DNS - SHORT CONE
DSS - SUPER SHORT CONE

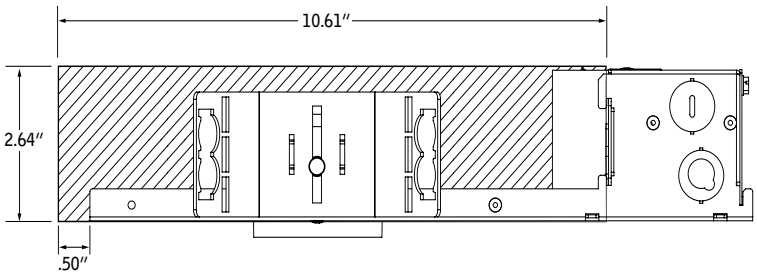

©2022 Focal Point, LLC | 4141 S. Pulaski Rd., Chicago, IL 60632 | www.focalpointlights.com/reference

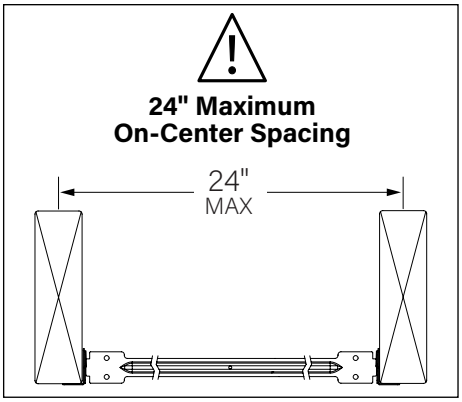

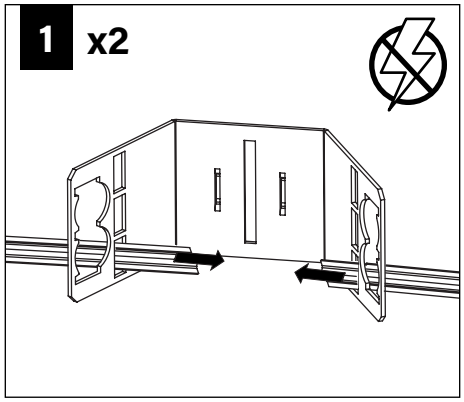

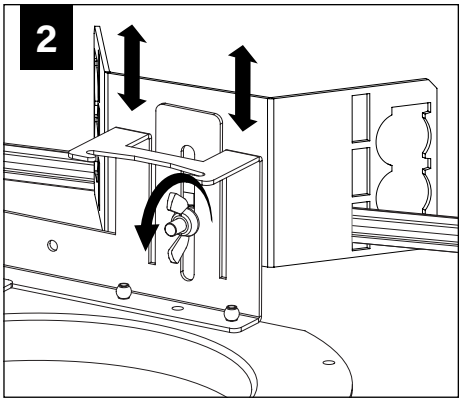

WOOD STUDS

METAL STUDS

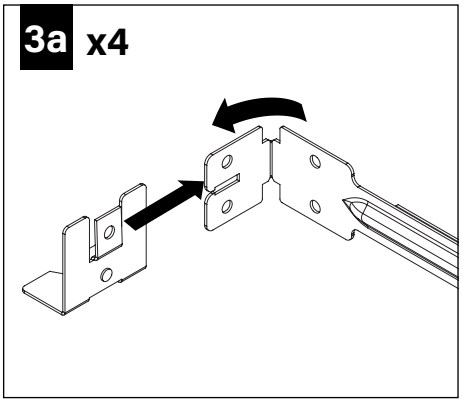

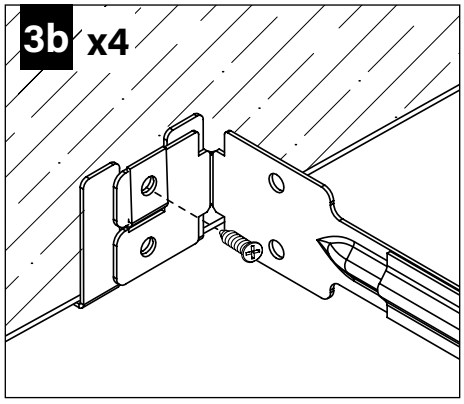

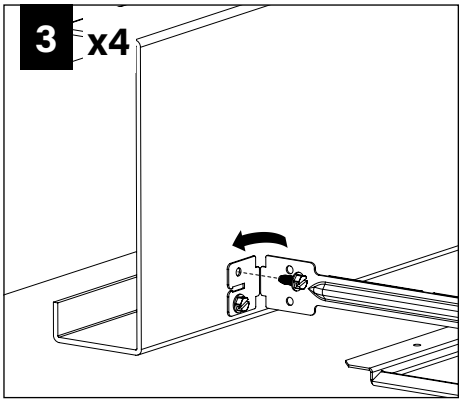

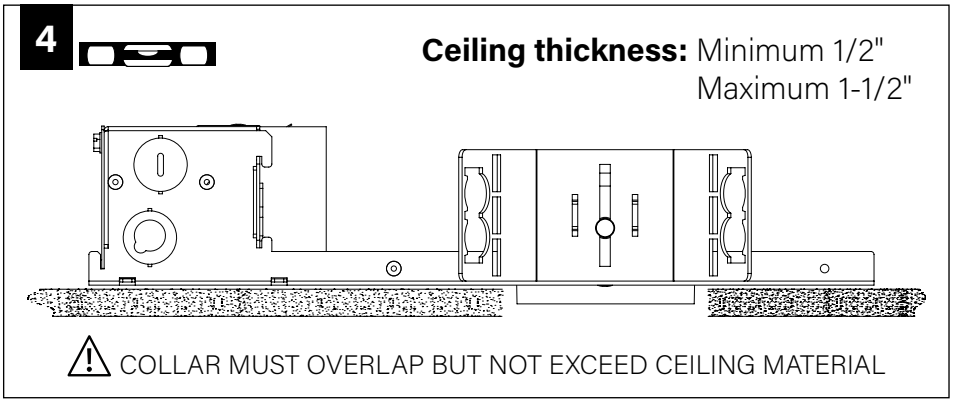

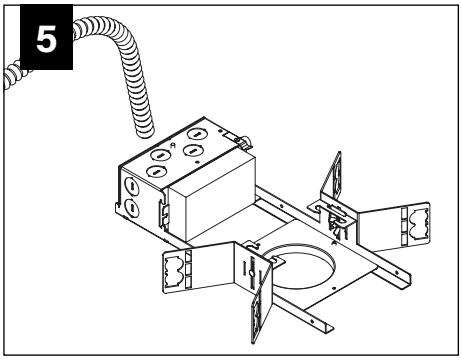

MAKE ELECTRICAL CONNECTION

MUD-IN

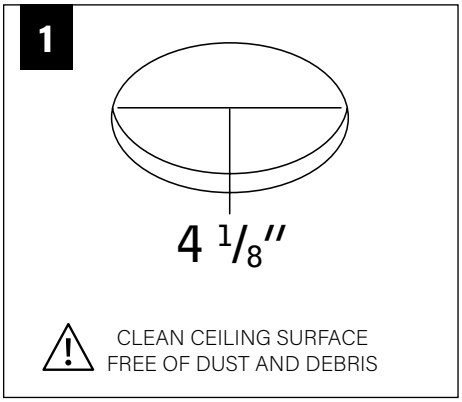

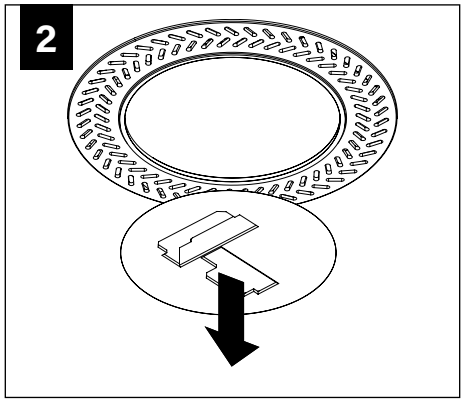

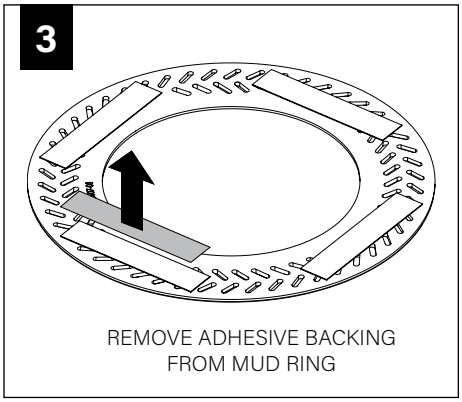

©2022 Focal Point, LLC | 4141 S. Pulaski Rd., Chicago, IL 60632 | www.focalpointlights.com/reference

4

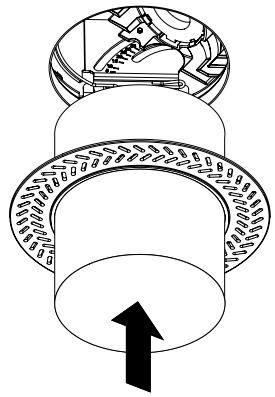

5

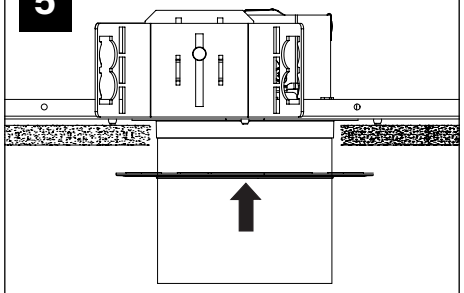

USE FOAM CYLINDER TO ALIGN MUD RING WITH HOUSING COLLAR OPENING

6

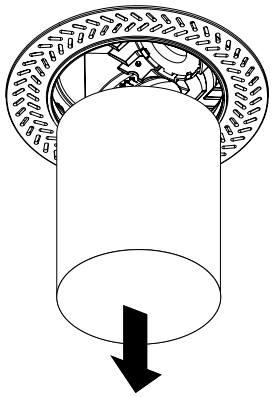

7

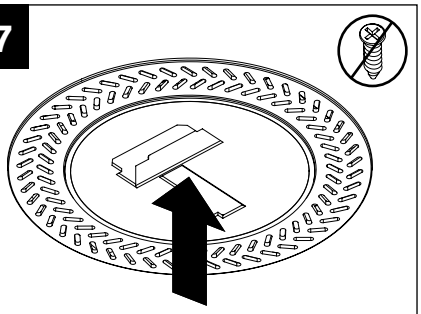

DO NOT REMOVE DUST COVER UNTIL TAPE AND MUD-IN COMPLETE

8

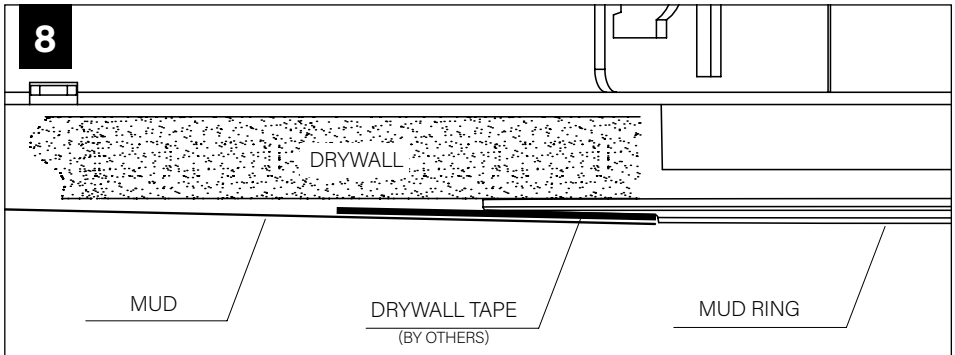

APPLY TAPE AND DRYWALL COMPOUND AT LEAST 8-12" OUT FROM APERTURE

9

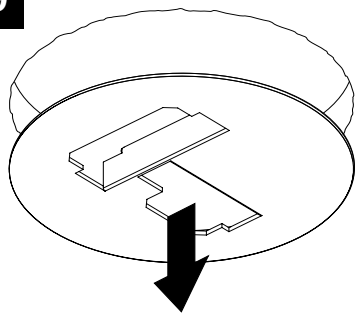

10

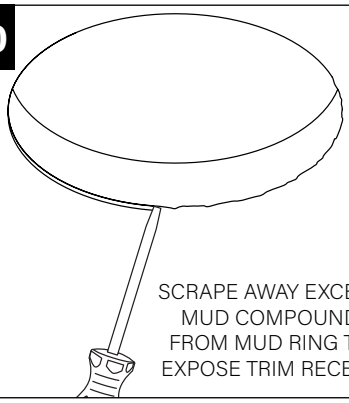

SCRAPE AWAY EXCESS MUD COMPOUND FROM MUD RING TO EXPOSE TRIM RECESS

WOOD CEILING

WOOD CEILING INSTALLATION KIT PARTS LIST

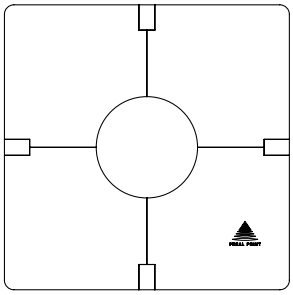

WOOD ROUTING JIG

5/16" MINIATURE RABBETING BIT WITH 1/16" CUT DEPTH

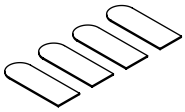

3M COMMAND POSTER STRIP #136 (QTY. 40)

1

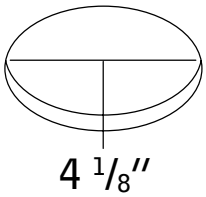

CLEAN WOOD CEILING SURFACE AND WOOD ROUTING JIG FREE OF DUST AND DEBRIS

©2022 Focal Point, LLC | 4141 S. Pulaski Rd., Chicago, IL 60632 | www.focalpointlights.com/reference

2 x4

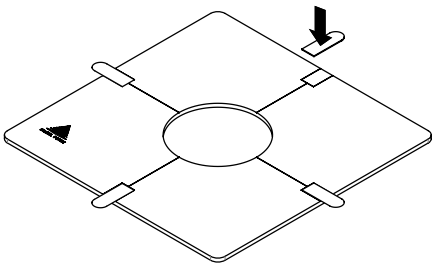

ADHERE COMMAND POSTER STRIPS TO WOOD ROUTING JIG

3 ADHERE WOOD ROUTING JIG TO WOOD CEILING SURFACE

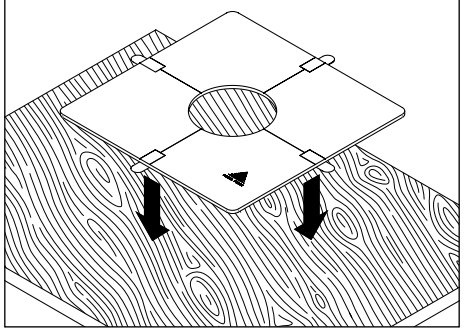

4 CREATE STARTER HOLE

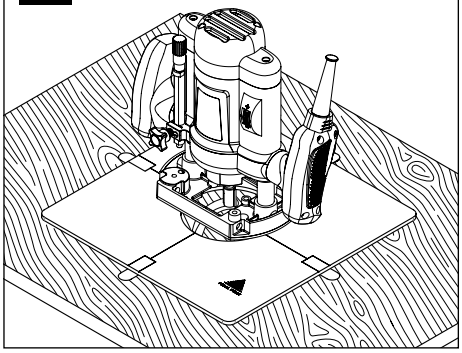

5 CREATE MAIN HOLE USING WOOD CEILING JIG AS GUIDE

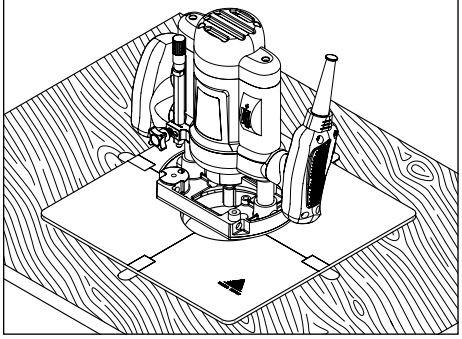

6 REMOVE WOOD ROUTING JIG FROM WOOD CEILING SURFACE

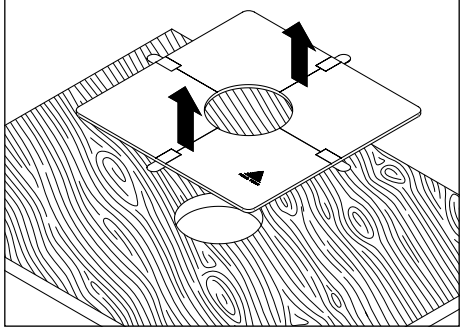

7

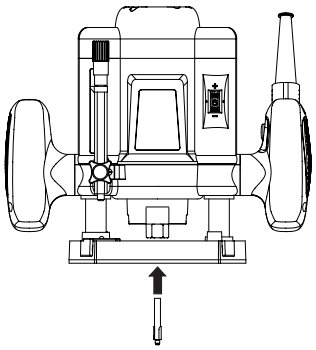

INSTALL 5/16" MINIATURE RABBETING BIT WITH 1/16" CUT DEPTH

8a

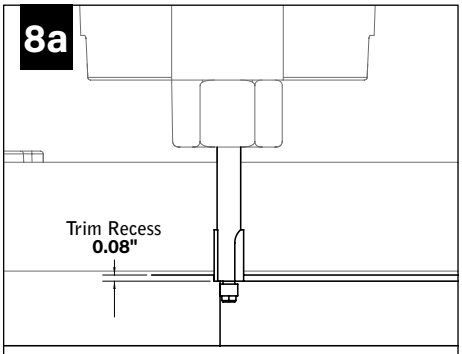

SET DEPTH OF RABBETING BIT

8b USE TRIM TO DOUBLE CHECK DEPTH

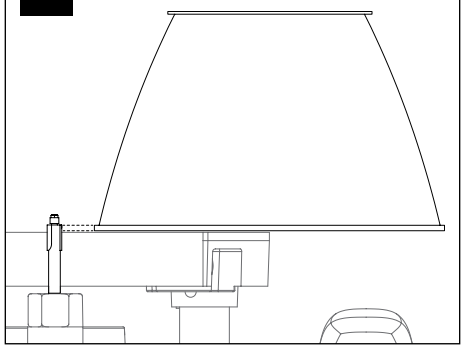

9

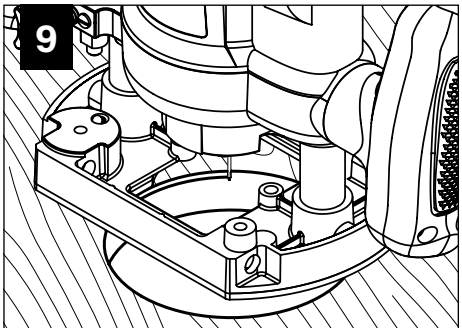

CREATE TRIM RECESS USING RABBETING BIT

DRIVER SERVICE

TO PREVENT ELECTRICAL SHOCK, DISCONNECT ELECTRICAL SUPPLY BEFORE SERVICING

1

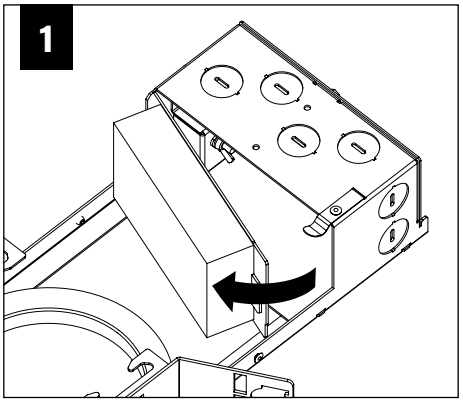

2

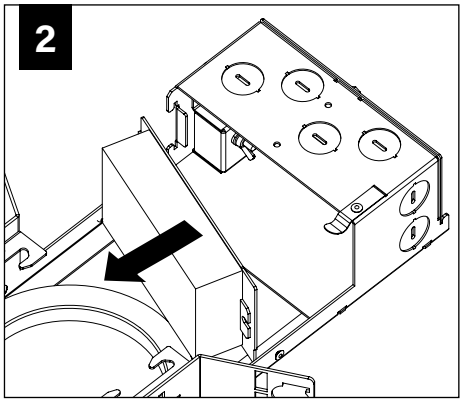

©2022 Focal Point, LLC | 4141 S. Pulaski Rd., Chicago, IL 60632 | www.focalpointlights.com/reference