Seem® 1

LED DIRECT

FOCAL POINT®

suspended pop-down lens

surface mount flush lens

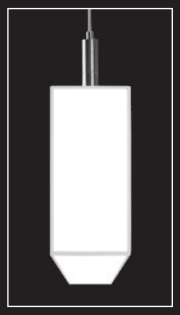

lit end cap detail

surface mount pop-down lens

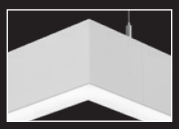

corner detail

DIMENSIONAL DATA

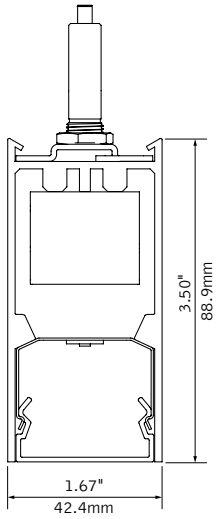

Asymmetric Lens
Batwing Lens
Flush Lens

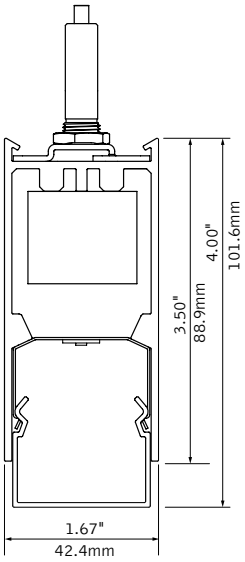

0.5" Pop-Down Lens

Mounting Information

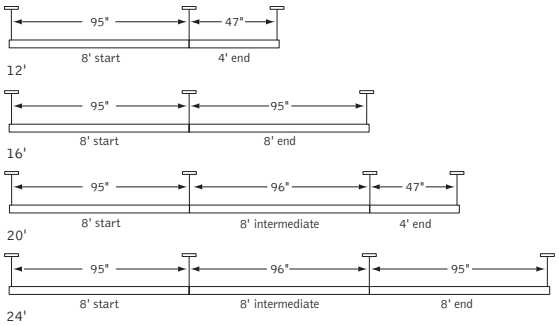

Consult factory for additional row length information.

FEATURES

Narrow extruded aluminum 1.5" linear direct LED with Asymmetric, Batwing and Pop-Down lens options.

Individual units and continuous runs in 1" increments.

Frosted acrylic lens provides uninterrupted illumination, without pixels or shadows.

LED position and lens material optimized to provide the perfect blend of high performance and visual comfort.

Choice of output levels to meet a wide variety of application needs.

Preferred Light: Lighting for better color rendition and human preference.

PoE compatible: Integrates with Power over Ethernet lighting systems via standard, low-voltage wires.

DISTRIBUTIONS

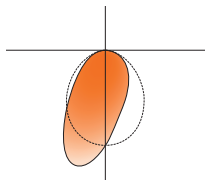

Asymmetric Lens

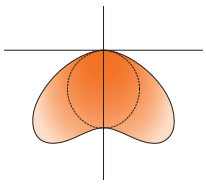

Batwing Lens

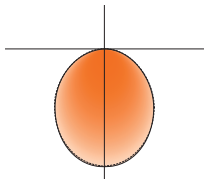

Flush Lens

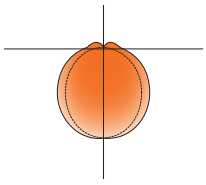

0.5" Pop-Down Lens

Photometric performance is measured in accordance with IESNA LM-79.
Visit focalpointlights.com for complete photometric data.

DETAILS

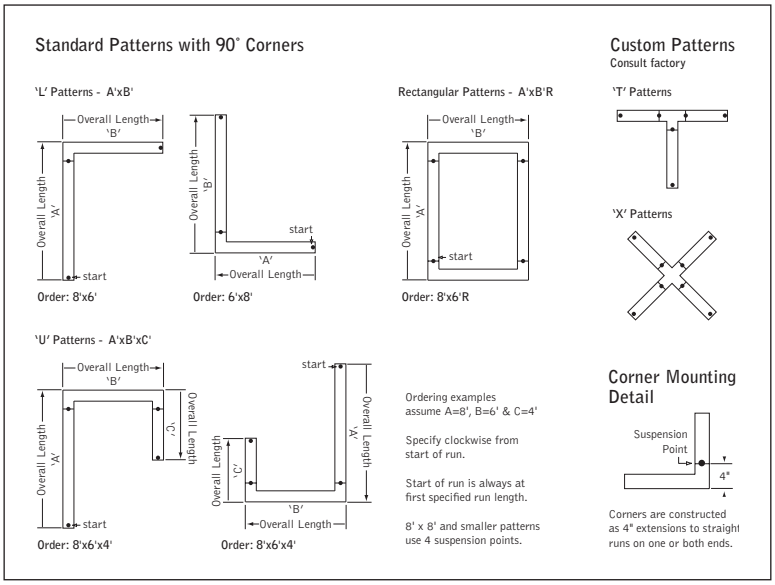

SPECIFICATIONS

LED System
Proprietary linear LED module incorporates premium LEDs on a robust platform to achieve excellent thermal management. LEDs are placed to promote a uniform appearance. Available in 3000K, 3500K or 4000K with both 80 and 90 CRI options. 3500K and 4000K with CRI>90 have a cyanosis observation index (COI) of 3.3 or less. LED modules and drivers are replaceable from below. Color accuracy <3 SDCM.

Construction
One piece extruded aluminum housing. Cast aluminum end caps. 8' unit weight: 15lbs.

Optic
Reflectors fabricated of 22 Ga. steel finished in High Reflectance White powder coat. Extruded acrylic lens .07" thick with frosted finish, up to 8' continuous. 15–30" recommended distance from wall for Asymmetric Lens (AS).

Electrical
Luminaires are pre–wired with factory installed branch circuit wiring and over-molded quick connects. Standard 120-277V constant current driver includes 0-10V analog dimming. Power factor > .9. PoE compatible: Integrates with Power over Ethernet lighting systems via standard, low-voltage wires. PoE runs require an independent PoE node and power feed for each luminaire section.

Emergency Battery
Emergency output - 10 watts for 90 minutes. See EM/EC Guide for default locations and ordering details.

Labels
UL and cUL listed. Suitable for Dry or Damp Locations, indoor use only.

Finish
Polyester powder coat applied over a multi-stage pre–treatment. Canopy and cord white as standard.

Lumen Maintenance
Reported: L70 at >61,000 hours
L90 at >61,000 hours

Calculated: L70 at 470,000 hours
L90 at 115,000 hours

Derived from EPA TM-21 calculator. Based on typical conditions, consult factory for additional data.

Reliability
At Focal Point, our products are designed to stand the test of time. Each luminaire is engineered using superior components, manufactured with the utmost care and rigorously tested. Contact us for reliability data.

Warranty
LED system rated for operation in ambient environments up to 25°C. 5-year limited warranty.

PERFORMANCE CHARTS
See page 3.

ORDERING

Luminaire Series		**FSM1S**
Seem 1 LED	FSM1S	
Shielding		_____
Asymmetric Lens	AS	
Batwing Lens	BW	
Flush Lens	FL	
Pop-Down Lens	PD05	
Lumen Output		_____
125 Lumens per foot (4' minimum length. Consult factory for Lutron, DALI)	125LF	
250 Lumens per foot (3' minimum length)	250LF	
375 Lumens per foot	375LF	
500 Lumens per foot	500LF	
625 Lumens per foot	625LF	
Color Temperature		_____
3000K, 80 CRI **or** 90 CRI	30K **or** 930K	
3500K, 80 CRI **or** 90 CRI	35K **or** 935K	
4000K, 80 CRI **or** 90 CRI	40K **or** 940K	
3500K, Preferred Light	P35K	
Circuit		**1C**
Single Circuit	1C	
Voltage		_____
120/277 UNV Volt	UNV	
347 Volt (LD1 driver only)	347	
Low Voltage	LV	
Control System & Dimming Level		_____
0-10V - 10% Dimming	LD1	
0-10V - 1% Dimming	L11	
Low Voltage, PoE compatible (No driver. Not available with EM or EC. LV Voltage only.)	LVN	
Lutron Hi-Lume EcoSystem (LDE1) - 1% Dimming	LH1	
Lutron 5-Series EcoSystem (LDE5) - 5% Dimming	LU5	
DALI 1% Dimming	D11	
Mounting		_____
24" Cable Suspension	C24__	
48" Cable Suspension	C48__	
96" Cable Suspension (Specify canopy color White (WH), Black (BK) or Titanium Silver (TS). Example: C24WH.) (Specify one of the following in place of "C" J - for 2" canopies at non–feed locations. CS - for sloped ceiling applications.)	C96__	
Surface Mount	SM	
Factory Options		
Black Cord	BKCD	_____
Lit End Caps (Pair, adds 2" to overall luminaire length. FL shielding only. Not available with P35K.)	LE	_____
Emergency Circuit	_EC	_____
Emergency Battery Pack (4' minimum length. See EM/EC Guide for default locations and ordering details.)	_EM	_____
Finish		_____
Black	BK	
Titanium Silver	TS	
Matte White Housing	WH	
Luminaire Length		**ft in**
Specify luminaire/row length in 1" increments (2' minimum. Leave blank for patterns. Smaller increments available, consult factory.)	_ft _in	
Pattern Options (3' minimum length)		_____
'L' pattern	A' x B'	
'U' pattern	A' x B' x C'	
Rectangular pattern (Consult factory for other pattern options)	A' x B' R	

QS 10 DAY Options in orange qualify for the Quickship program. 1000' total. Refer to Quickship Guide for complete details including EM/EC options.

4' PERFORMANCE CHART

Lumen Output	Delivered Lumens	Tested System Watts	Lumens Per Watt (LPW)			
			AS	BW	FL	PD05
125LF	500	6	82	81	75	76
250LF	1000	10	105	98	98	99
375LF	1500	15	110	103	104	105
500LF	2000	19	114	106	106	107
625LF	2500	24	110	103	103	100

Based on 3500K, 4' length. Lumen multipliers: Preferred Light = 0.65, 90 CRI = 0.87.
Delivered lumens may vary +/- 5%. Actual wattage may vary +/- 5%

LIT END CAP PERFORMANCE CHART

Lumen Output	Delivered Lumens Per End Cap	Tested System Watts Per End Cap	Lumens Per Watt (LPW)
			LE
125LF	55	0.6	91
250LF	115	1.0	110
375LF	172	1.5	116
500LF	229	1.9	119
625LF	291	2.5	116

Based on 3500K. Lumen multipliers: 90 CRI = 0.87. Delivered lumens may vary +/- 5%. Actual wattage may vary +/- 5%
Tested System Watts is not incremental, but the portion of overall wattage consumed by the Lit End Cap module

DIRECT ASYMMETRIC
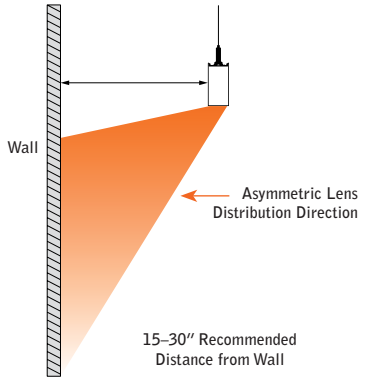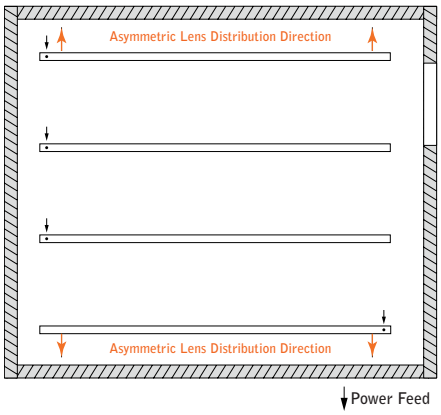
Standard Application Example