Polina® Uplight

INDIRECT PENDANT

FOCAL POINT®

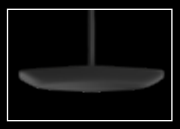

Black

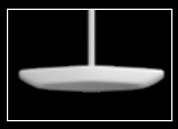

White

Palladium Silver

Shallow Canopy detail

Mini Power Canopy detail

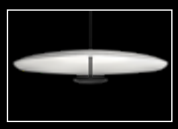

Acoustic Pendant companion

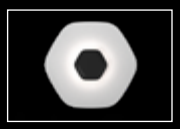

Acoustic Sconce companion

DIMENSIONAL DATA

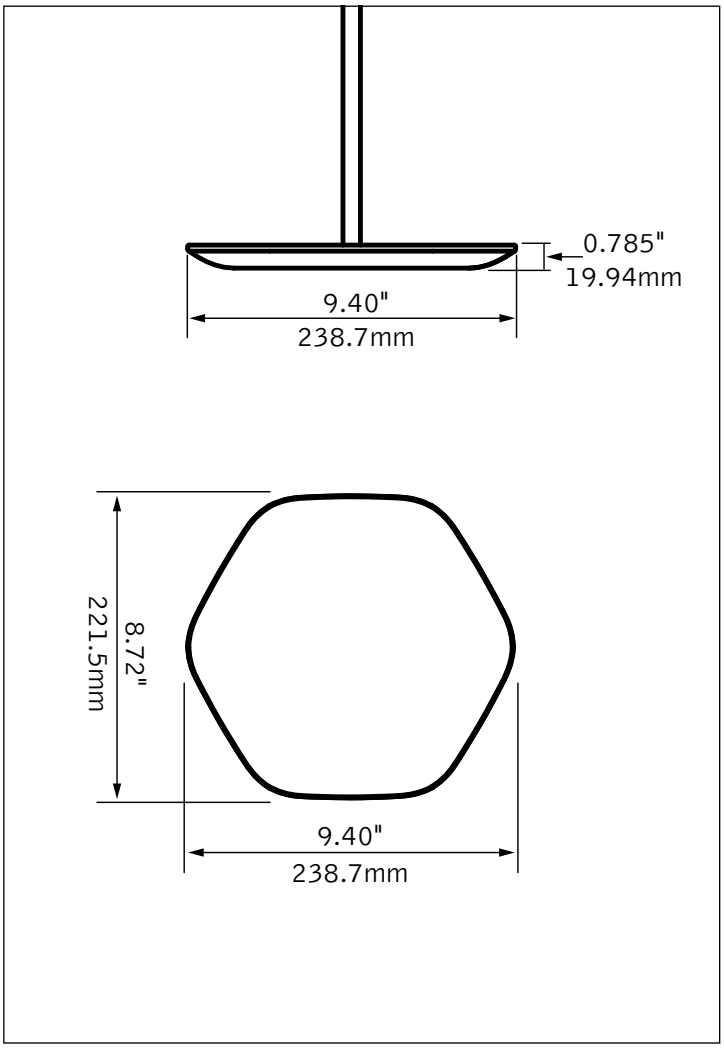

FEATURES

Soft hexagonal indirect pendant, nominal 10" diameter.

Four lumen outputs, up to 3400 lumens.

Mini power canopy or remote power system, suitable for open, drywall, or grid ceiling installation.

Field cuttable stem suspension.

Companion illuminated acoustic pendant, wall sconce and unlit shades available for suspended or wall mounting.

DISTRIBUTION

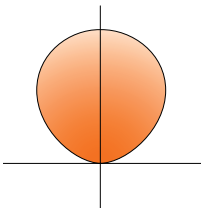

Lambertian
Dust Cover

Photometric performance is measured in accordance with IESNA LM-79.
Visit focalpointlights.com for complete photometric data.

SPECIFICATIONS

LED System
Proprietary LED module incorporates premium LEDs on a robust platform to achieve excellent thermal management. LEDs are placed to promote a uniform appearance. Available in 2700K, 3000K, 3500K or 4000K with both 80 and 90 CRI options. LED modules are replaceable from below. Color accuracy <3 SDCM.

Construction
9.4" diameter aluminum housing. Remove dust and debris with vacuum or dabbing with damp lint free cloth, avoid rubbing to preserve illuminated surface quality.
Weight: Luminaire will not exceed 7lbs.

Electrical
Standard 120-277V driver includes 0-10V analog dimming. Power factor > .9.

Labels
UL and cUL listed. Suitable for Dry Locations, indoor use only.

Finishes
Polyester powder coat applied over a multi-stage pre–treatment.

Lumen Maintenance
Reported: L70 at >72,000 hours Calculated: L70 at 193,000 hours
Reported: L90 at >55,000 hours Calculated: L90 at 55,000 hours
Derived from EPA TM-21 calculator. Based on typical conditions, consult factory for additional data.

Reliability
At Focal Point, our products are designed to stand the test of time. Each luminaire is engineered using superior components, manufactured with the utmost care and rigorously tested. Contact us for reliability data.

Warranty
LED system rated for operation in ambient environments up to 25°C. 5-year limited warranty.

PERFORMANCE CHART (PRELIMINARY)

Lumen Output	Total System Watts	Delivered Lumens	LPW
Low (LWP)	7.9	1091	138
Medium (MDP)	15.4	1987	129
High (HHP)	21.2	2777	131
Max (MXP)	25.2	3409	135

Based on 3500K, 80CRI. Lumen output may vary +/- 5%. Actual wattage may vary +/- 5%.

LUMEN MULTIPLIERS

CRI	CCT			
	2700K	3000K	3500K	4000K
80	0.93	0.96	1.00	1.02
90	0.79	0.82	0.85	0.87

ORDERING

Luminaire Series		**FPOLP**
Polina Pendant	FPOLP	
Profile		**SHX**
Soft Hexagon	SHX	
Size		**10**
Nominal 10"	10	
Shielding		**DC**
Dust Cover	DC	
Lumen Output		
Low	LWP	
Medium	MDP	
High	HHP	
Max	MXP	
Color Temperature		
2700K, 80CRI **or** 90 CRI	27K **or** 927K	
3000K, 80CRI **or** 90 CRI	30K **or** 930K	
3500K, 80CRI **or** 90 CRI	35K **or** 935K	
4000K, 80CRI **or** 90 CRI	40K **or** 940K	
Circuit		**1C**
Single Circuit	1C	
Voltage		**UNV**
120/277 UNV	UNV	
Control System & Dimming Level		**L11**
0-10V - 1% Dimming	L11	
Power Configuration		
Integrated Power: Mini Power Canopy (Powers 1 unit, mounted to J-box. See page 4 for details.)	MPC	
Remote Power: Shallow Canopies (Powers multiple units per box, requires RPS-POL.)	RSC	
Canopy Color (Consult factory for custom colors)		
Matte Black	BK	
Matte White	WH	
Palladium Silver	PS	
Mounting Stem length measured from the j-box to the bottom of pendant		
12", Field Cuttable Stem	S12	
24", Field Cuttable Stem	S24	
60", Field Cuttable Stem	S60	
1'– 6' in 1' increments, Field Cuttable Stem (Specify in inches, example: 6' stem = S72)	S_	
Suspension Color		
Matte Black	BK	
Matte White	WH	
Palladium Silver	PS	
Luminaire Finish (Consult factory for custom colors)		
Matte Black	BK	
Matte White	WH	
Palladium Silver	PS	

Focal Point LLC reserves the right to change specifications for product improvement without notification.

fixture: project:

SYSTEM DIAGRAMS

OC MOUNTING TYPE
Open Ceiling Remote Box and Luminaire J-Box

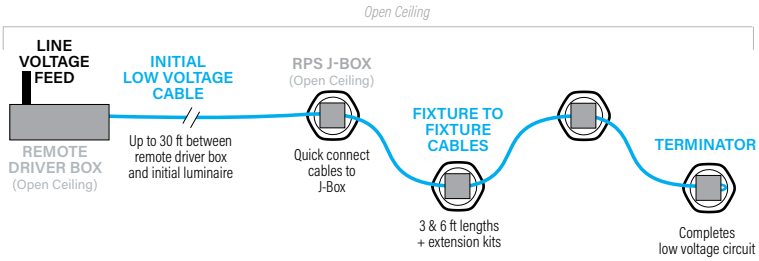

OCR MOUNTING TYPE
Open Ceiling Remote box and Recessed Luminaire J-Box

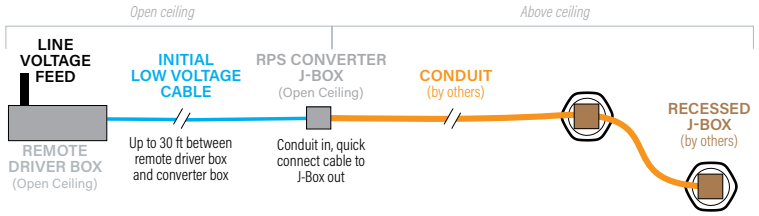

XF MOUNTING TYPE
Mud-In Drywall Remote box and Recessed Luminaire J-Box

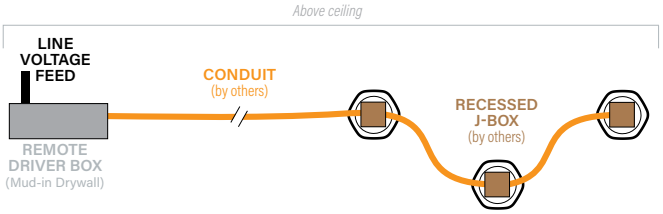

XFO MOUNTING TYPE
Mud-In Drywall Remote box and Open Ceiling Luminaire J-Box

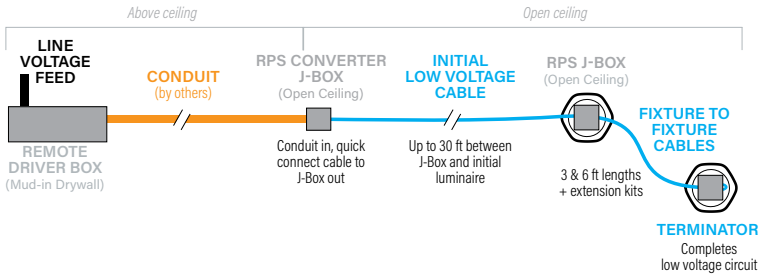

REMOTE POWER SYSTEM AVAILABILITY

Lumen Output	Luminaires per remote box	Drivers per remote box
Low (LWP)	1-11	1
	12-22	2
Medium (MDP)	1-5	1
	6-10	2
High (HHP)	1-4	1
	5-8	2
Max (MXP)	1-3	1
	4-6	2

Fixtures will be evenly divided between drivers when possible. For an odd number of fixtures, driver 1 will power the additional fixture. For alternate fixture/driver layouts, consult factory.

REMOTE POWER SYSTEM ORDERING

Remote Power System — **RPSPOL**
Polina — RPSPOL

Mounting Type — _____

Remote Box Location	Luminaire J-box Location	
Open Ceiling	Open Ceiling	OC
Open Ceiling	Recessed	OCR
Mud-In Drywall (IC rated)	Recessed	XF
Mud-In Drywall (IC rated)	Open Ceiling	XFO

For mixed mounting configurations, consult factory.

Quantity of Luminaires Powered — _____
See offering table for availability
Qty of Luminaires — __L

Initial Cable Length* — _____
Leave blank for XF Mounting Type.
Cable from Remote Driver box to first RPS J-box.
9ft — 9IC
30ft — 30IC

Fixture to Fixture Cable Length* — _____
Leave blank for OCR & XF Mounting Types.
3ft — 3FC
6ft — 6FC

Lumen Output — _____
Must match specified luminaires
Low — LWP
Medium — MDP
High — HHP
Max — MXP

Circuit — **1C**
Single Circuit — 1C

Voltage — **UNV**
120/277 UNV — UNV

Control System & Dimming Level — **L11**
0-10V - 1% Dimming — L11

Factory Options
Polina Pendant System — FPOLP — **FPOLP**
Chicago Plenum — CP — _____
(Not available with OC or OCR remote box mounting types)

Remote Box Faceplate Color — _____
Matte Black — BK
Matte White — WH
Palladium Silver — PS

Canopy Type — **SC**
Shallow Canopy — SC

Canopy Color — _____
Matte Black — BK
Matte White — WH
Palladium Silver — PS

REMOTE POWER SYSTEM CABLE EXTENSION KIT
Order additional cable lengths to extend the distance between fixtures.*
Not compatible with OCR or XF Mounting Types.

3ft — RPS-KIT3 — _____
6ft — RPS-KIT6 — _____

*Cables may not be cut to length in the field.

Focal Point LLC reserves the right to change specifications for product improvement without notification.

REMOTE POWER SYSTEM SPECIFICATIONS

Construction

Flexible and modular plug and play remote power system. Open Ceiling (OC, OCR) remote power box is rated for surface mounting in open ceiling or wall applications. Not to be installed in any recessed condition. Remote power box is easily installed in an open ceiling space or an adjacent electrical room with direct to strut and surface mounting features. Mud-In Drywall (XF, XFO) remote power box is Type IC inherently protected, suitable for direct contact with insulation. Decorative access plate is removable for ease of installation and maintenance.

Electrical

Standard 120-277V driver includes 0-10V analog dimming. Power factor > .9. 3-wire constant current architecture ensures uniform illumination to support any fixture spacing requirements. Low-voltage Class 2 cable wiring system easily daisy chains multiple fixtures and eliminates electrical conduit in open ceiling applications. CMP (Plenum rated) cable with UL94V-0 rated connectors.

Labels

UL and cUL listed. Suitable for Dry Locations, indoor use only.

Faceplate Finish

Polyester powder coat applied over a multi-stage pre–treatment.

Reliability

At Focal Point, our products are designed to stand the test of time. Each luminaire is engineered using superior components, manufactured with the utmost care and rigorously tested. Contact us for reliability data.

Warranty

Open ceiling (OC, OCR) remote power box rated for ambient temperatures up to 40˚C. Recessed ceiling (XF, XFO) remote power box rated for ambient temperatures up to 25˚C. 5-year limited warranty.

Remote Power System (RPS) details

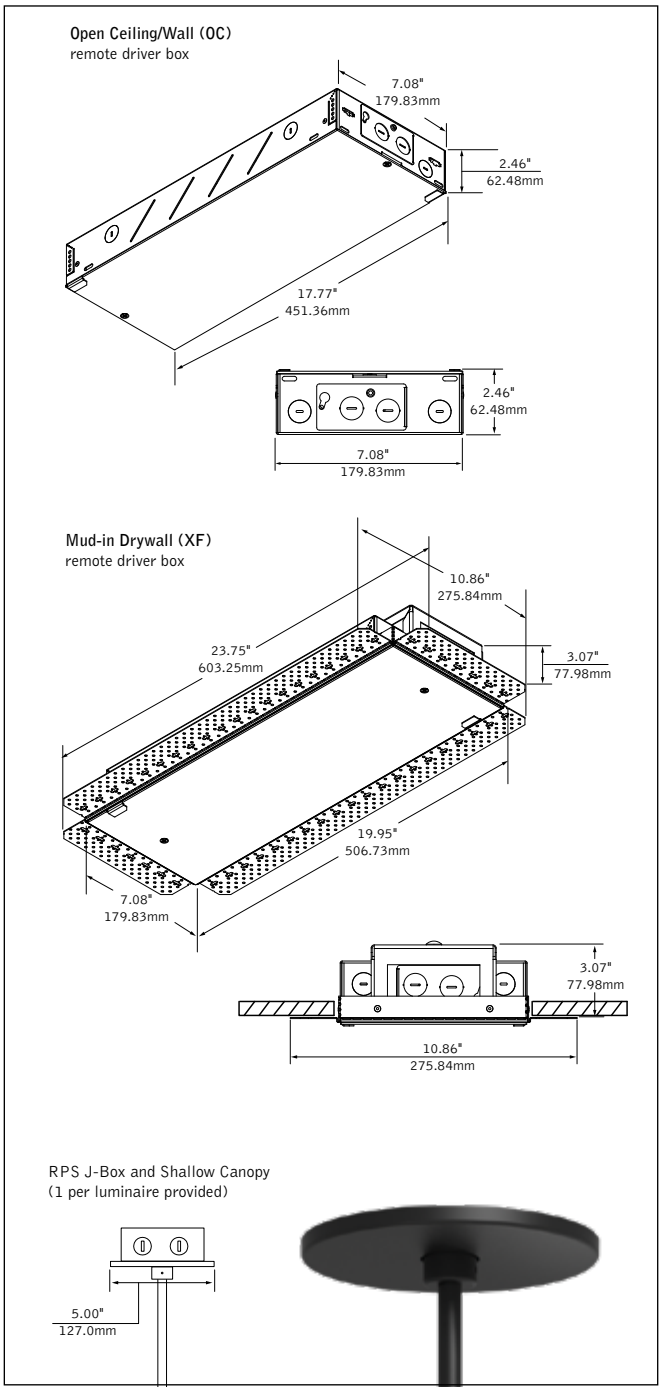
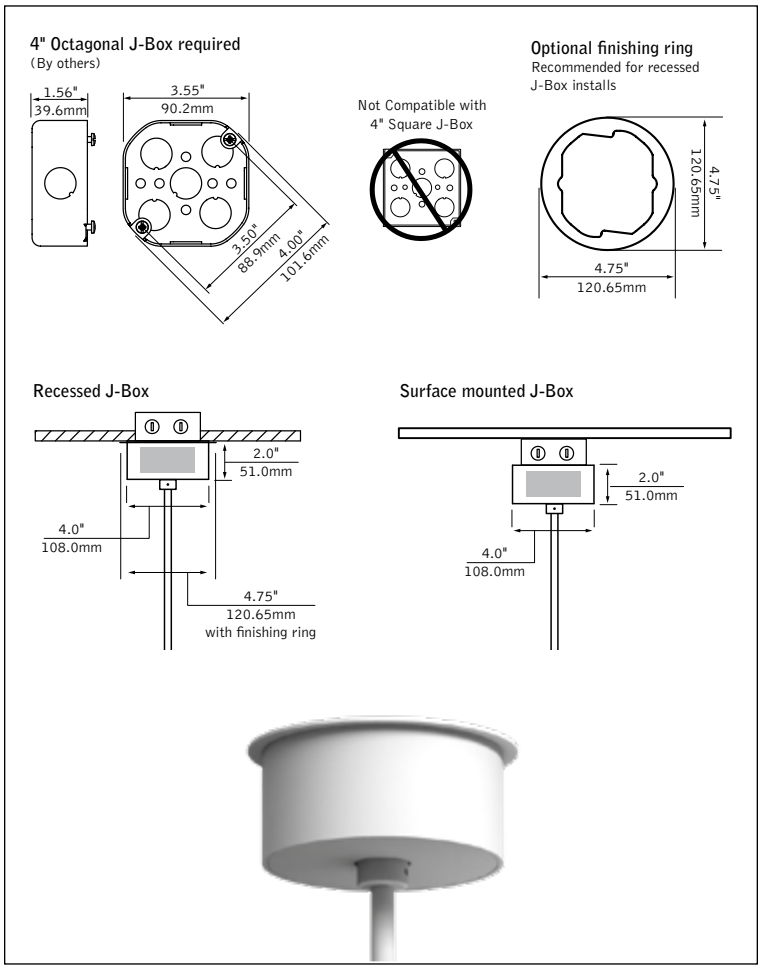
MPC - Mini Power Canopy