Seem 2™ LED Asymmetric trim flange

FSM2AL-TF

FOCAL POINT®

NEW CONSTRUCTION ONLY

CONFIGURATIONS ARE RUN SPECIFIC, PLEASE CONSULT FACTORY DRAWINGS BEFORE BEGINNING INSTALLATION.

FOCAL POINT

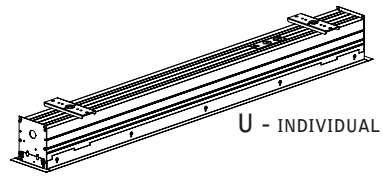

U - INDIVIDUAL

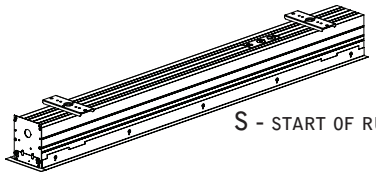

S - START OF RUN

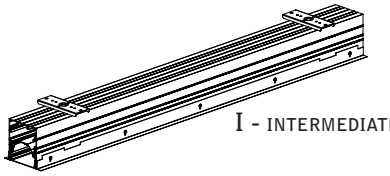

I - INTERMEDIATE

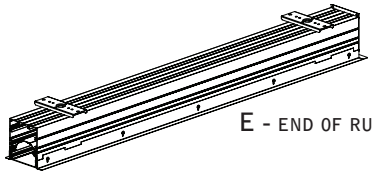

E - END OF RUN

PARTS LISTS

INCLUDED HARDWARE

REFLECTOR SCREW
(72010)
(8-18 x 1/4 SELF TAPPING SCREW)

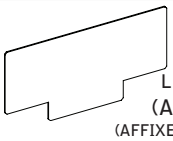

LENS TOOL
(A10554-01)
(AFFIXED TO HOUSING. ONE PER RUN)

PARTS SHIPPED INSTALLED

JOINER BRACKET ASSEMBLY

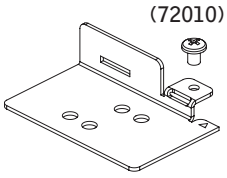

MOUNTING BRACKET ASSEMBLY

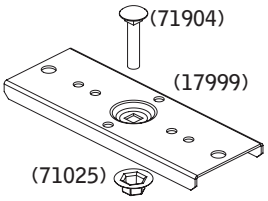

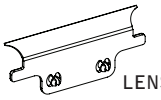

LENS END PIECE
(A08608)

JOINER PIN
(70058)

KEY

POWER OFF

POWER ON

ATTENTION

MOUNTING BRACKET MUST BE INSTALLED PRIOR TO DRYWALL

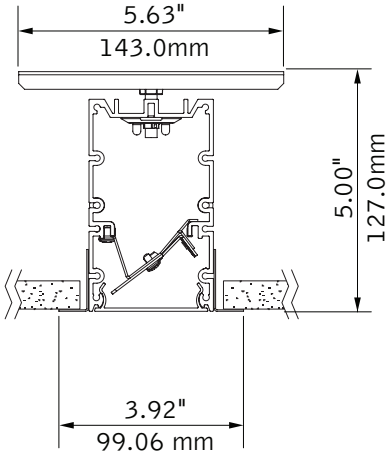

MOUNTING BRACKET MUST BE SECURED TO STRUCTURE ABOVE.

1/4" - 20 CARRIAGE BOLT MAY BE SUPPLIED BY OTHERS FOR GREATER ADJUSTABILITY.

MOUNTING LOCATIONS

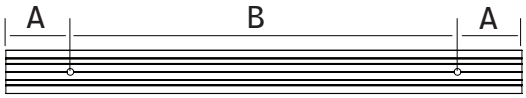

START OF RUN/INDIVIDUAL

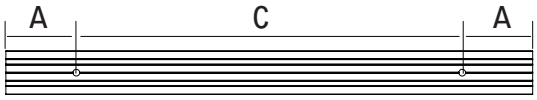

INTERMEDIATE/END OF RUN

housing length	A	B	C
2'	2.5"	18"	19"
3'	2.5"	30"	31"
4'	2.5"	42"	43"
5'	2.5"	54"	55"
6'	2.5"	66"	67"
7'	2.5"	78"	79"
8'	2.5"	90"	91"

MOUNTING LOCATION CHART IS AN APPROXIMATE GUIDE ONLY.

Luminaires must be installed by a qualified electrician (check with local and national codes for proper installation).
To prevent electrical shock, disconnect electrical supply before installation or servicing.

2017 ©Focal Point, LLC 4141 S. Pulaski Rd., Chicago, IL 60632 | www.focalpointlights.com

CEILING CUTOUT

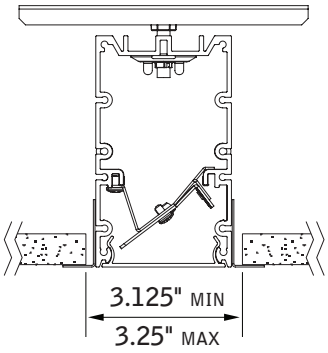

CEILING CUTOUT LENGTH =
NOMINAL RUN LENGTH MINUS 5/16" (+/- 1/16")

EXAMPLE:
12' RUN LENGTH = 11' 11-3/4" CUTOUT LENGTH

1

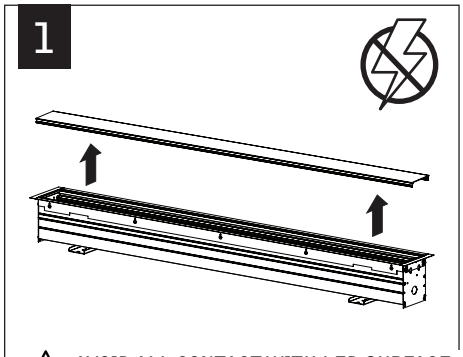

AVOID ALL CONTACT WITH LED SURFACE, LEDs ARE EASILY DAMAGED!

2

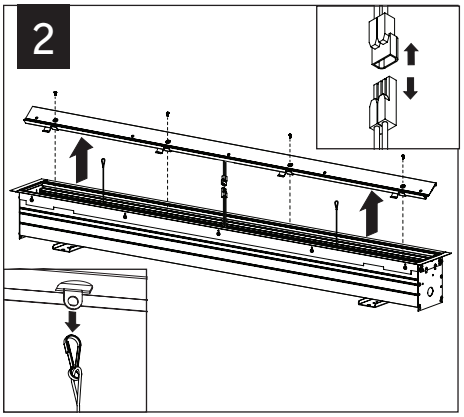

3

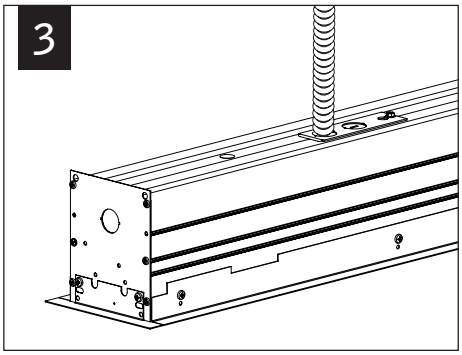

MAKE ELECTRICAL CONNECTIONS

4

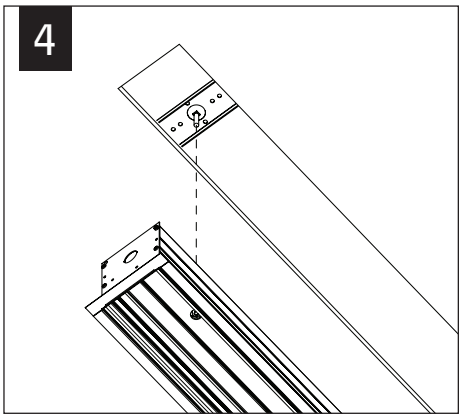

5

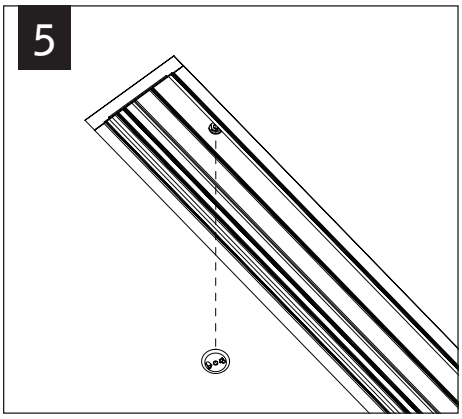

6

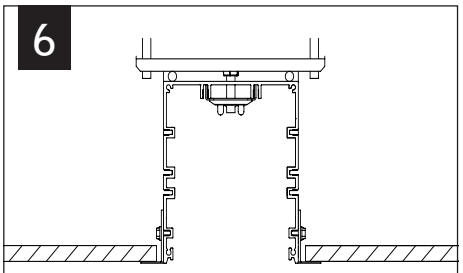

TIGHTEN LUMINAIRE SNUG TO THE CEILING

REPEAT STEPS 4-6 UNTIL ALL UNITS ARE IN THE CEILING

INDIVIDUAL INSTALLATIONS SKIP TO STEP 9

7

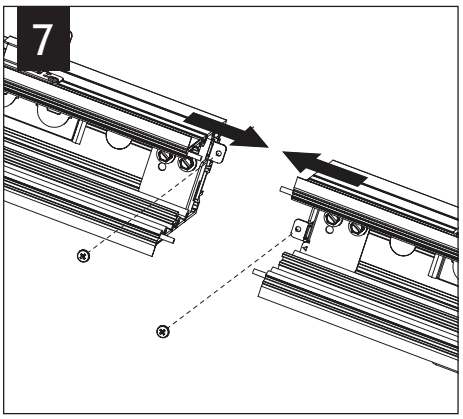

8

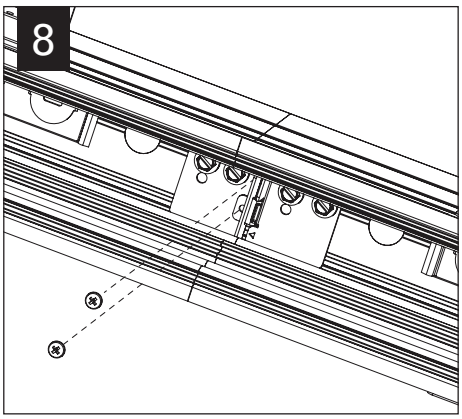

9

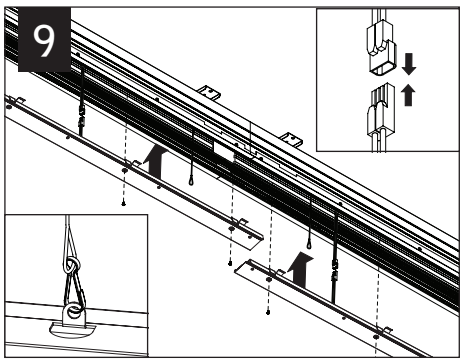

MAKE ELECTRICAL CONNECTIONS

Luminaires must be installed by a qualified electrician (check with local and national codes for proper installation).
To prevent electrical shock, disconnect electrical supply before installation or servicing.

2017 ©Focal Point, LLC 4141 S. Pulaski Rd., Chicago, IL 60632 | www.focalpointlights.com

10 SECURE REFLECTORS TO HOUSING (4 SCREWSPER REFLECTOR)

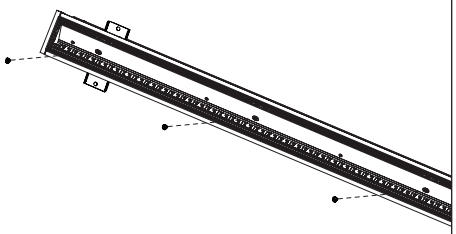

AVOID ALL CONTACT WITH LED SURFACE, LEDs ARE EASILY DAMAGED!

11

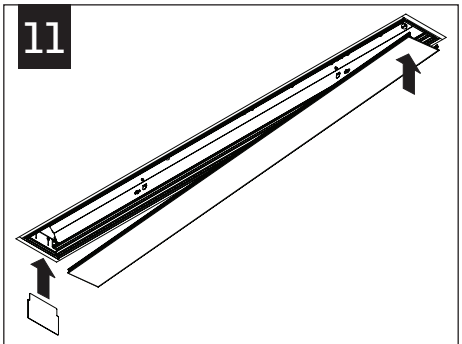

REFERENCE INSTRUCTIONS ON INCLUDED TOOL FOR LENS INSTALLATION.

12

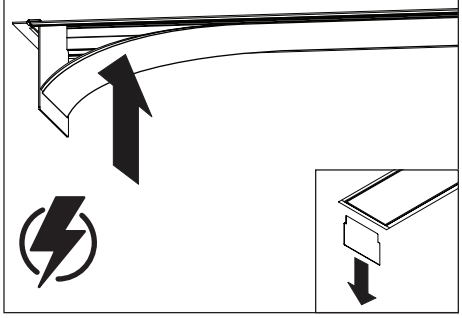

DRIVER SERVICE

1

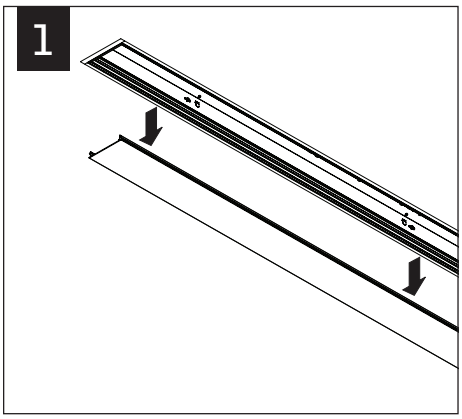

2

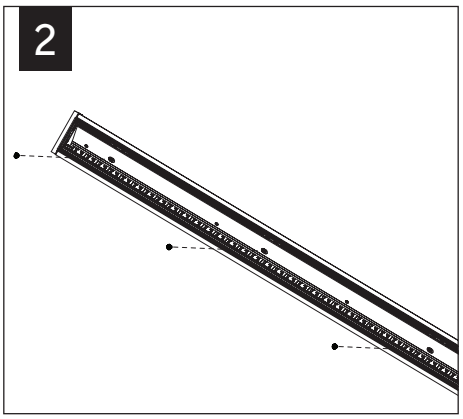

3

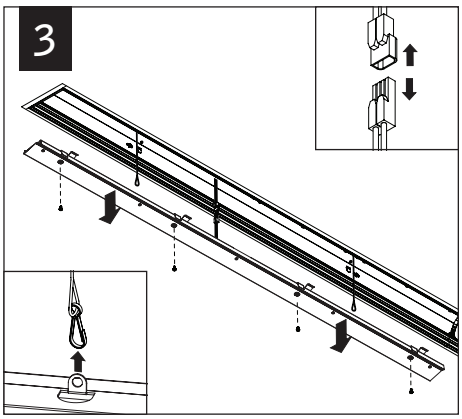

EMERGENCY

SEE BATTERY MANUFACTURER INSTRUCTIONS

EMERGENCY MAXIMUM MOUNTING HEIGHT:
19.08′

Contractor is responsible for adequately reinforcing walls and/or ceilings to support luminaire weight. Focal Point, LLC accepts no responsibility for inadequately reinforced walls and/or ceilings. The information contained in this drawing is the sole property of Focal Point, LLC. Any reproduction in part or whole without the written permission of Focal Point, LLC is prohibited.