Groove™ G

FLUORESCENT

FOCAL POINT®

white prismatic

clear prismatic with metalized interior

clear prismatic

frosted green diffusion disk

frosted white diffusion disk

conical lens

sconce companion

DIMENSIONAL DATA

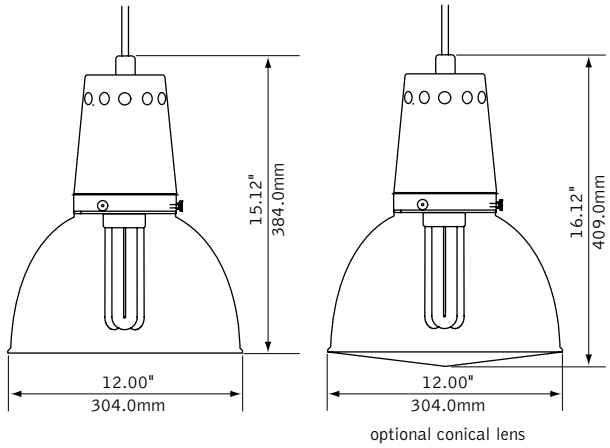

lamping options

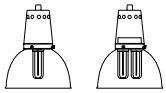

32W TRIPLE TUBE

FEATURES

Pendant mount decorative compact fluorescent luminaire.

Housing and canopy are high quality spun aluminum with acrylic refractor.

Ideally suited for retail, hospitality, lobbies, corridors, open ceiling areas and other specialty applications.

PERFORMANCE

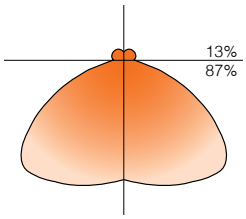

PRODUCT OVERVIEW

Lumen Output:	1567-4123lm
Wattage:	36-69W
Lamping:	TT

Visit focalpointlights.com for complete photometric data.

SPECIFICATIONS

Construction

Housing and canopy are each one-piece precision-spun 14Ga. aluminum. Housing: 7.62"H x 12" Dia. Canopy: 1.32"H x 4.52" Dia. stepped design with #8-32 recessed set screw. Weight: 10 lbs.

Optic

Molded acrylic prismatic refractor: 7.47"H x 12.00"Dia. aperture with fluted pattern. Optional frosted green or white acrylic diffusion disk with polished edges is retained by aluminum fasteners and (3) #8-32 thumb screws. Optional conical lens with stainless steel clamp band.

Electrical

Luminaires are pre-wired for single circuit with thermally protected Class “P” electronic ballast. Factory installed decorative metal braided power cord is included. White SJT power cord supplied for 347V. 144" cord is provided on all luminaires and may be cut to length in field. One or two lamp triple tube compact fluorescent, 4-pin, 32W (GX24q-3).

Labels

UL listed.

Finish

Luminaire housing and canopy are clear anodized with polished satin finish.

ORDERING

Luminaire Series		**FGR**
Groove	FGR	
Profile		**G**
Profile	G	
Shielding		
Clear Prismatic Refractor	C	
Clear Prismatic Refractor with Metallized Interior	M	
White Prismatic Refractor (Contact factory for additional reflector colors)	W	
Lamp Quantity		
One Lamp	1	
Two Lamp	2	
Lamp Type		**32TT**
32w. Triple Tube, GX24q-3	32TT	
Ballast		**S**
Electronic <15% THD	S	
Voltage		
120 Volt	120	
277 Volt	277	
347 Volt	347	
120/277 UNV	UNV	
Suspension		**C144**
Cable, Straight Feed (144" cable, cut in field)	C144	
Factory Options		
Frosted Green Diffusion Disk	GD	
Frosted White Diffusion Disk	WD	
Conical Lens	CL	
Include 3000K Lamp*	L830	
Include 3500K Lamp*	L835	
Include 4100K Lamp*	L841	
Finish		**NA**
Natural Anodized (Contact factory for paint color options)	NA	

Focal Point LLC reserves the right to change specifications for product improvement without notification.

*For more information visit focalpointlights.com/reference or consult factory.